https://www.yetcoil.com E-mail: carlkuo@yetcoil.hk

# YETCOIL

Changsha Yuyang Magnetic Co., Ltd.

# YTT-MED Toroidal High-Frequency Isolation Transformer

**Document no.: YTT-MED-OCS-2026-110 / Rev. C**

**Date:** 10 November 2026

**Basis: YTT-MED technical datasheet Rev. B and calculation book Rev. B. This revision adds the dual primary 110/230 VAC winding data, the flat braided litz secondary construction and the certification status statement**

**Scope:** Seven configurations of the preliminary order schedule (1,000 pcs)

This document contains proprietary design information of YETCOIL and is issued for customer evaluation only.

**Important disclaimer — certification status**

1. This transformer is a custom built component for integration into the customer end equipment and is not a certified finished product in its own right.

2. YETCOIL does not hold a UL 5085-1 / UL 5085-2 Recognized Component file for this finished transformer.

3. YETCOIL maintains no UL 1446 insulation system file. Only the individual raw material UL certificates issued by our material suppliers can be provided, on request. A set of raw material certificates does not constitute a UL 1446 insulation system qualification.

4. Electrical, thermal and dielectric performance is verified by YETCOIL in house test procedures according to the IEC standards quoted in this document.

5. Safety certification of the end product, including any UL assessment, remains the responsibility of the system integrator.

# 1 Scope and configuration matrix

This document specifies, configuration by configuration, the seven transformers of the preliminary order schedule received from Veolia | Water Tech on 10 November 2026. Each clause gives the electrical requirement, the winding data, the core specification, the dimensional envelope, the mass, the guaranteed loss and temperature data, the mounting and the termination of one line item. The engineering basis is the YTT-MED datasheet and calculation book already supplied; every figure in this document is taken from the same design model, so the numbers agree with those two documents at the ratings where they overlap.

All seven configurations are built on the same construction: bunched Class F enamelled copper primary, flat-braided litz wire secondary, closed-ring core, Class F insulation, vacuum impregnated without a housing, centre-bolt or baseplate mounting, embedded thermal protector and an electrostatic shield between primary and secondary. Differences between the lines are limited to the core material, the number of turns, the conductor build and the dimensions. No line item requires forced air.

| Line | Configuration code | Rating (VA) | Frequency | Core material | A — OD (mm) | B — ID (mm) | C — H (mm) | Core mass (g) | Guaranteed η (%) | Design rise (K) |
|---|---|---|---|---|---|---|---|---|---|---|
| 1 | YTT-MED-500-25K-FE | 500 | 25 kHz | Mn-Zn ferrite | 49.0 | 34.0 | 32 | 152 | 97.5 | 48 |
| 2 | YTT-MED-1000-25K-FE | 1000 | 25 kHz | Mn-Zn ferrite | 65.0 | 38.0 | 25 | 254 | 98.0 | 48 |
| 3 | YTT-MED-1500-25K-FE | 1500 | 25 kHz | Mn-Zn ferrite | 74.0 | 39.0 | 26.0 | 370 | 98.0 | 49 |
| 4 | YTT-MED-2000-20K-FE | 2000 | 20 kHz | Mn-Zn ferrite | 80.0 | 50.0 | 40.0 | 550 | 98.0 | 48 |
| 5 | YTT-MED-3000-20K-FE | 3000 | 20 kHz | Mn-Zn ferrite | 100.0 | 50.0 | 40.0 | 1116 | 98.0 | 46 |

| Line | Configuration code | Rating (VA) | Frequency | Core material | A — OD (mm) | B — ID (mm) | C — H (mm) | Core mass (g) | Guaranteed η (%) | Design rise (K) |
|---|---|---|---|---|---|---|---|---|---|---|
| 6 | YTT-MED-4000-20K-FE | 4000 | 20 kHz | Mn-Zn ferrite | 102.0 | 65.8 | 45.0 | 1020 | 98.0 | 46 |
| 7 | YTT-MED-5000-20K-FE | 5000 | 20 kHz | Mn-Zn ferrite | 107.0 | 65.0 | 54.0 | 1470 | 98.0 | 47 |

Table 1 Configuration matrix of the preliminary order schedule (1,000 pcs)

The design rise in the last column is the calculated hot-spot rise multiplied by 1.3, the tolerance factor used throughout the family. It stays below 50 K for every line, which is the limit that makes natural convection admissible at 40 °C ambient.

## 2 Common technical requirements

The following requirements apply to all seven configurations and are not repeated in the individual clauses. A configuration clause states only what differs from this common basis.

Table 2 Common technical requirements

| Item | Requirement |
|---|---|
| Rated input | 230 VAC, 50/60 Hz, single phase, sinusoidal supply (standard build). Optional dual-primary winding: two identical 115 V sections, connected in SERIES for 230 VAC and in PARALLEL for 110 VAC. Four leads P1 to P4 are brought out so that the customer selects the connection externally; no internal changeover link is fitted (Clause 13, Table 15). |
| Primary sections | 2 × Np/2 turns per section (see each line table). Volts per turn is the same in both connections, so flux density, core loss, copper loss and temperature rise are unchanged between 230 VAC series and 110 VAC parallel operation. |
| Rated output | 24 VAC, one secondary winding, resistive or rectifier load |
| Output tolerance | ±3 % at rated load, 25 °C ambient |
| Regulation | ≤ 5 % from no load to rated load, typical 3 % |
| Insulation class | Class F (155 °C) insulation system built from class F rated materials, impregnated and tested in house. The material combination is not qualified against UL 1446; the certification status is stated in Clause 14. |
| Dielectric strength | 3,000 VAC 60 s primary to secondary; 2,000 VAC winding to core; 4,000 VAC for the medical variant |
| Insulation resistance | ≥ 100 MΩ at 500 VDC, 60 s, primary to secondary, at 25 °C |
| Electrostatic shield | Copper foil between primary and secondary, connected to a separate shield lead; shield capacitance ≤ 250 pF |
| Thermal protection | Embedded thermal protector, one-shot fuse or resettable cut-out, tripping at 115 °C ± 5 K, placed between the winding layers |
| Cooling | Natural convection, vertical mounting, unrestricted air on all surfaces |
| Winding material | Copper, class F enamel (NEMA MW 35-C) or copper strip, impregnated |
| Core | Uncut ring, no air gap, epoxy coated, single-piece winding |
| Ambient | −20 °C to +40 °C, 5 % to 85 % RH non-condensing |
| Standards | Designed to IEC 61558-1 and IEC 61558-2-16; RoHS and REACH compliant. The finished transformer does not hold UL 5085-1 / UL 5085-2 Recognized Component approval, and YETCOIL maintains no UL 1446 insulation system file. UL certified raw insulating materials are used throughout, and the supplier issued raw material certificates are available on request. |
| Marking | YETCOIL name, configuration code, rating, frequency, input and output voltage, insulation class and date code. No UL mark and no UL file number are applied to the unit. |

The electrical arrangement that the clauses refer to is shown in Figure 1: primary winding Np, secondary winding Ns, the electrostatic shield between them with its own lead, and the thermal protector in series with the primary.

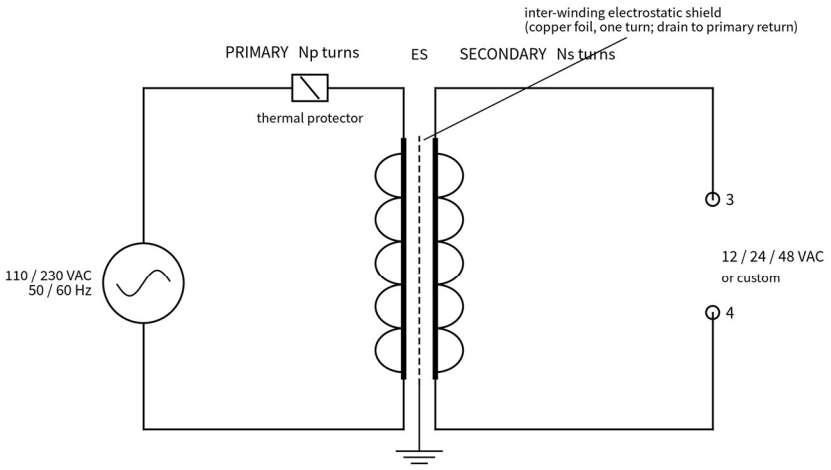


Figure 1 Electrical arrangement common to all seven configurations

# 3 Line 1 — YTT-MED-500-25K-FE (500 VA, 25 kHz, ferrite)

Input 230 VAC, output 24 VAC, single secondary, Class F, natural convection, electrostatic shield and embedded thermal protector, as requested for this line.

Table 3 Requirements of line 1, YTT-MED-500-25K-FE

| Parameter | Symbol | Requirement |
|---|---|---|
| Rated power | VA | 500 VA |
| Rated frequency | f | 25000 Hz (25 kHz), fixed |
| Core material | — | Mn-Zn ferrite, 3C95 equivalent, epoxy coated |
| Turns ratio | Np : Ns | 91 : 9 |
| Primary turns | Np | 91 |
| Primary sections (dual primary option) | Np/2 each | 2 sections of 46 and 45 turns; 91 turns total in series for 230 VAC, 46 turns in parallel for 110 VAC |
| Secondary turns | Ns | 9 |
| Peak flux density | B | 0.164 T |
| Primary conductor | — | 9 × ø0.35 mm (AWG 27) bunched, 0.90 mm² total, per section |
| Secondary conductor | — | Flat-braided litz wire, 9.12 mm² copper, ≈95 × ø0.35 mm (AWG 27) individually enamelled strands |
| Current density | J | 2.41 A/mm² primary, 2.28 A/mm² secondary |
| Primary current | Ip | 2.17 A |
| Secondary current | Is | 20.8 A |
| Primary resistance, 20 °C | Rp | 0.114 Ω |
| Secondary resistance, 20 °C | Rs | 0.0013 Ω |
| Core loss, calculated | Pcore | 1.22 W |
| Copper loss, calculated | Pcu | 1.46 W |
| Total loss, calculated | Ptotal | 2.68 W |
| Calculated efficiency at rated load | η | 99.5 % |
| Guaranteed minimum efficiency | η min | 97.5 % at rated load, 25 °C ambient |
| Hot-spot rise, calculated | ΔT | 37.1 K at 2.68 W total loss |
| Design rise with 1.3 tolerance factor | 1.3 ΔT | 48 K |
| A — outside diameter | A | 48.0 mm ± 5 |
| B — inside diameter | B | 26.4 mm ± 3.5 |
| C — height | C | 20.2 mm ± 5 |
| Core mass | — | 122 g |
| Total mass, estimated | — | 237 g |
| Effective core area | Ae | 2.18 cm² |
| Magnetic path length | le | 116.9 mm |
| Window area | Aw | 5.5 cm² |
| Winding window utilisation | Ku | 0.30 (each winding occupies half the window) |
| Insulation class | — | Class F (155 °C) |
| Dielectric strength | — | 3,000 VAC 60 s primary to secondary; 2,000 VAC to core |
| Insulation resistance | — | ≥ 100 MΩ at 500 VDC |
| Electrostatic shield | — | Copper foil, separate lead, ≤ 250 pF |
| Thermal protector | — | 115 °C ± 5 K, embedded between winding layers |
| Mounting | — | Centre bolt M5 with nylon insulation washer; aluminium baseplate option |
| Termination | — | Primary leads 150 mm, AWG 18 silicone; secondary leads 150 mm, AWG 16; lead length D = 120 mm standard (50–300 mm on request) |
| Cooling | — | Natural convection, vertical mounting |

The rise of this line is 37.1 K calculated and 48 K with the tolerance factor, so the rating is covered by natural convection with a margin of 2 K below the 50 K design limit. The guaranteed efficiency of 97.5 % is roughly 1.3 points below the calculated 99.5 %, which absorbs material spread, winding tolerance and measurement uncertainty.

# 4 Line 2 — YTT-MED-1000-25K-FE (1000 VA, 25 kHz, ferrite)

Input 230 VAC, output 24 VAC, single secondary, Class F, natural convection, electrostatic shield and embedded thermal protector, as requested for this line.

Table 4 Requirements of line 2, YTT-MED-1000-25K-FE

| Parameter | Symbol | Requirement |
|---|---|---|
| Rated power | VA | 1000 VA |
| Rated frequency | f | 25000 Hz (25 kHz), fixed |
| Core material | — | Mn-Zn ferrite, 3C95 equivalent, epoxy coated |
| Turns ratio | Np : Ns | 62 : 6 |
| Primary turns | Np | 62 |
| Primary sections (dual primary option) | Np/2 each | 2 sections of 31 and 31 turns; 62 turns total in series for 230 VAC, 31 turns in parallel for 110 VAC |
| Secondary turns | Ns | 6 |
| Peak flux density | B | 0.154 T |
| Primary conductor | — | 22 × ø0.35 mm (AWG 27) bunched, 2.07 mm² total, per section |
| Secondary conductor | — | Flat-braided litz wire, 21.38 mm² copper, ≈222 × ø0.35 mm (AWG 27) individually enamelled strands |
| Current density | J | 2.10 A/mm² primary, 1.95 A/mm² secondary |
| Primary current | Ip | 4.35 A |
| Secondary current | Is | 41.7 A |
| Primary resistance, 20 °C | Rp | 0.043 Ω |
| Secondary resistance, 20 °C | Rs | 0.0005 Ω |
| Core loss, calculated | Pcore | 2.02 W |
| Copper loss, calculated | Pcu | 2.18 W |
| Total loss, calculated | Ptotal | 4.20 W |
| Calculated efficiency at rated load | η | 99.6 % |
| Guaranteed minimum efficiency | η min | 98.0 % at rated load, 25 °C ambient |
| Hot-spot rise, calculated | ΔT | 37.2 K at 4.20 W total loss |
| Design rise with 1.3 tolerance factor | 1.3 ΔT | 48 K |
| A — outside diameter | A | 60.0 mm ± 5 |
| B — inside diameter | B | 33.0 mm ± 3.5 |
| C — height | C | 25.2 mm ± 5 |
| Core mass | — | 239 g |
| Total mass, estimated | — | 468 g |
| Effective core area | Ae | 3.40 cm² |
| Magnetic path length | le | 146.1 mm |
| Window area | Aw | 8.6 cm² |
| Winding window utilisation | Ku | 0.30 (each winding occupies half the window) |
| Insulation class | — | Class F (155 °C) |
| Dielectric strength | — | 3,000 VAC 60 s primary to secondary; 2,000 VAC to core |
| Insulation resistance | — | ≥ 100 MΩ at 500 VDC |
| Electrostatic shield | — | Copper foil, separate lead, ≤ 250 pF |
| Thermal protector | — | 115 °C ± 5 K, embedded between winding layers |
| Mounting | — | Centre bolt M5 with nylon insulation washer; aluminium baseplate option |
| Termination | — | Primary leads 150 mm, AWG 18 silicone; secondary tabs on strip ends; lead length D = 120 mm standard (50–300 mm on request) |
| Cooling | — | Natural convection, vertical mounting |

The rise of this line is 37.2 K calculated and 48 K with the tolerance factor, so the rating is covered by natural convection with a margin of 2 K below the 50 K design limit. The guaranteed efficiency of 98.0 % is roughly 1.3 points below the calculated 99.6 %, which absorbs material spread, winding tolerance and measurement uncertainty.

# 5 Line 3 — YTT-MED-1500-25K-FE (1500 VA, 25 kHz, ferrite)

Input 230 VAC, output 24 VAC, single secondary, Class F, natural convection, electrostatic shield and embedded thermal protector, as requested for this line.

Table 5 Requirements of line 3, YTT-MED-1500-25K-FE

| Parameter | Symbol | Requirement |
|---|---|---|
| Rated power | VA | 1500 VA |
| Rated frequency | f | 25000 Hz (25 kHz), fixed |
| Core material | — | Mn-Zn ferrite, 3C95 equivalent, epoxy coated |
| Turns ratio | Np : Ns | 52 : 5 |
| Primary turns | Np | 52 |
| Primary sections (dual primary option) | Np/2 each | 2 sections of 26 and 26 turns; 52 turns total in series for 230 VAC, 26 turns in parallel for 110 VAC |
| Secondary turns | Ns | 5 |
| Peak flux density | B | 0.143 T |
| Primary conductor | — | 33 × ø0.35 mm (AWG 27) bunched, 3.17 mm² total, per section |
| Secondary conductor | — | Flat-braided litz wire, 32.96 mm² copper, ≈262 × ø0.40 mm (AWG 26) individually enamelled strands |
| Current density | J | 2.06 A/mm² primary, 1.90 A/mm² secondary |
| Primary current | Ip | 6.52 A |
| Secondary current | Is | 62.5 A |
| Primary resistance, 20 °C | Rp | 0.027 Ω |
| Secondary resistance, 20 °C | Rs | 0.0003 Ω |
| Core loss, calculated | Pcore | 2.42 W |
| Copper loss, calculated | Pcu | 3.06 W |
| Total loss, calculated | Ptotal | 5.48 W |
| Calculated efficiency at rated load | η | 99.6 % |
| Guaranteed minimum efficiency | η min | 98.0 % at rated load, 25 °C ambient |
| Hot-spot rise, calculated | ΔT | 37.8 K at 5.48 W total loss |
| Design rise with 1.3 tolerance factor | 1.3 ΔT | 49 K |
| A — outside diameter | A | 68.0 mm ± 5 |
| B — inside diameter | B | 37.4 mm ± 3.5 |
| C — height | C | 28.6 mm ± 5 |
| Core mass | — | 347 g |
| Total mass, estimated | — | 685 g |
| Effective core area | Ae | 4.37 cm² |
| Magnetic path length | le | 165.6 mm |
| Window area | Aw | 11.0 cm² |
| Winding window utilisation | Ku | 0.30 (each winding occupies half the window) |
| Insulation class | — | Class F (155 °C) |
| Dielectric strength | — | 3,000 VAC 60 s primary to secondary; 2,000 VAC to core |
| Insulation resistance | — | ≥ 100 MΩ at 500 VDC |
| Electrostatic shield | — | Copper foil, separate lead, ≤ 250 pF |
| Thermal protector | — | 115 °C ± 5 K, embedded between winding layers |
| Mounting | — | Centre bolt M5 with nylon insulation washer; aluminium baseplate option |
| Termination | — | Primary leads 150 mm, AWG 18 silicone; secondary tabs on strip ends; lead length D = 120 mm standard (50–300 mm on request) |
| Cooling | — | Natural convection, vertical mounting |

The rise of this line is 37.8 K calculated and 49 K with the tolerance factor, so the rating is covered by natural convection with a margin of 1 K below the 50 K design limit. The guaranteed efficiency of 98.0 % is roughly 1.3 points below the calculated 99.6 %, which absorbs material spread, winding tolerance and measurement uncertainty.

# 6 Line 4 — YTT-MED-2000-20K-FE (2000 VA, 20 kHz, ferrite)

Input 230 VAC, output 24 VAC, single secondary, Class F, natural convection, electrostatic shield and embedded thermal protector, as requested for this line.

Table 6 Requirements of line 4, YTT-MED-2000-20K-FE

| Parameter | Symbol | Requirement |
|---|---|---|
| Rated power | VA | 2000 VA |
| Rated frequency | f | 20000 Hz (20 kHz), fixed |
| Core material | — | Mn-Zn ferrite, 3C95 equivalent, epoxy coated |
| Turns ratio | Np : Ns | 43 : 4 |
| Primary turns | Np | 43 |
| Primary sections (dual primary option) | Np/2 each | 2 sections of 22 and 21 turns; 43 turns total in series for 230 VAC, 22 turns in parallel for 110 VAC |
| Secondary turns | Ns | 4 |
| Peak flux density | B | 0.164 T |
| Primary conductor | — | 40 × ø0.40 mm (AWG 26) bunched, 5.04 mm² total, per section |
| Secondary conductor | — | Flat-braided litz wire, 54.20 mm² copper, ≈431 × ø0.40 mm (AWG 26) individually enamelled strands |
| Current density | J | 1.72 A/mm² primary, 1.54 A/mm² secondary |
| Primary current | Ip | 8.70 A |
| Secondary current | Is | 83.3 A |
| Primary resistance, 20 °C | Rp | 0.016 Ω |
| Secondary resistance, 20 °C | Rs | 0.0002 Ω |
| Core loss, calculated | Pcore | 3.92 W |
| Copper loss, calculated | Pcu | 3.19 W |
| Total loss, calculated | Ptotal | 7.11 W |
| Calculated efficiency at rated load | η | 99.7 % |
| Guaranteed minimum efficiency | η min | 98.0 % at rated load, 25 °C ambient |
| Hot-spot rise, calculated | ΔT | 37.3 K at 7.11 W total loss |
| Design rise with 1.3 tolerance factor | 1.3 ΔT | 48 K |
| A — outside diameter | A | 78.0 mm ± 5 |
| B — inside diameter | B | 42.9 mm ± 3.5 |
| C — height | C | 32.8 mm ± 5 |
| Core mass | — | 524 g |
| Total mass, estimated | — | 1041 g |
| Effective core area | Ae | 5.75 cm² |
| Magnetic path length | le | 189.9 mm |
| Window area | Aw | 14.5 cm² |
| Winding window utilisation | Ku | 0.30 (each winding occupies half the window) |
| Insulation class | — | Class F (155 °C) |
| Dielectric strength | — | 3,000 VAC 60 s primary to secondary; 2,000 VAC to core |
| Insulation resistance | — | ≥ 100 MΩ at 500 VDC |
| Electrostatic shield | — | Copper foil, separate lead, ≤ 250 pF |
| Thermal protector | — | 115 °C ± 5 K, embedded between winding layers |
| Mounting | — | Centre bolt M5 with nylon insulation washer; aluminium baseplate option |
| Termination | — | Primary leads 150 mm, AWG 18 silicone; secondary tabs on strip ends; lead length D = 120 mm standard (50–300 mm on request) |
| Cooling | — | Natural convection, vertical mounting |

The rise of this line is 37.3 K calculated and 48 K with the tolerance factor, so the rating is covered by natural convection with a margin of 2 K below the 50 K design limit. The guaranteed efficiency of 98.0 % is roughly 1.3 points below the calculated 99.7 %, which absorbs material spread, winding tolerance and measurement uncertainty.

# 7 Line 5 — YTT-MED-3000-20K-FE (3000 VA, 20 kHz, ferrite)

Input 230 VAC, output 24 VAC, single secondary, Class F, natural convection, electrostatic shield and embedded thermal protector, as requested for this line.

Table 7 Requirements of line 5, YTT-MED-3000-20K-FE

| Parameter | Symbol | Requirement |
|---|---|---|
| Rated power | VA | 3000 VA |
| Rated frequency | f | 20000 Hz (20 kHz), fixed |
| Core material | — | Mn-Zn ferrite, 3C95 equivalent, epoxy coated |
| Turns ratio | Np : Ns | 43 : 4 |
| Primary turns | Np | 43 |
| Primary sections (dual primary option) | Np/2 each | 2 sections of 22 and 21 turns; 43 turns total in series for 230 VAC, 22 turns in parallel for 110 VAC |
| Secondary turns | Ns | 4 |
| Peak flux density | B | 0.123 T |
| Primary conductor | — | 53 × ø0.40 mm (AWG 26) bunched, 6.71 mm² total, per section |
| Secondary conductor | — | Flat-braided litz wire, 72.17 mm² copper, ≈574 × ø0.40 mm (AWG 26) individually enamelled strands |
| Current density | J | 1.94 A/mm² primary, 1.73 A/mm² secondary |
| Primary current | Ip | 13.04 A |
| Secondary current | Is | 125.0 A |
| Primary resistance, 20 °C | Rp | 0.014 Ω |
| Secondary resistance, 20 °C | Rs | 0.0001 Ω |
| Core loss, calculated | Pcore | 2.86 W |
| Copper loss, calculated | Pcu | 6.22 W |
| Total loss, calculated | Ptotal | 9.08 W |
| Calculated efficiency at rated load | η | 99.7 % |
| Guaranteed minimum efficiency | η min | 98.0 % at rated load, 25 °C ambient |
| Hot-spot rise, calculated | ΔT | 35.8 K at 9.08 W total loss |
| Design rise with 1.3 tolerance factor | 1.3 ΔT | 46 K |
| A — outside diameter | A | 90.0 mm ± 5 |
| B — inside diameter | B | 49.5 mm ± 3.5 |
| C — height | C | 37.8 mm ± 5 |
| Core mass | — | 805 g |
| Total mass, estimated | — | 1599 g |
| Effective core area | Ae | 7.65 cm² |
| Magnetic path length | le | 219.1 mm |
| Window area | Aw | 19.2 cm² |
| Winding window utilisation | Ku | 0.30 (each winding occupies half the window) |
| Insulation class | — | Class F (155 °C) |
| Dielectric strength | — | 3,000 VAC 60 s primary to secondary; 2,000 VAC to core |
| Insulation resistance | — | ≥ 100 MΩ at 500 VDC |
| Electrostatic shield | — | Copper foil, separate lead, ≤ 250 pF |
| Thermal protector | — | 115 °C ± 5 K, embedded between winding layers |
| Mounting | — | Centre bolt M6 with nylon insulation washer; aluminium baseplate option |
| Termination | — | Primary leads 150 mm, AWG 18 silicone; secondary tabs on strip ends; lead length D = 120 mm standard (50–300 mm on request) |
| Cooling | — | Natural convection, vertical mounting |

The rise of this line is 35.8 K calculated and 46 K with the tolerance factor, so the rating is covered by natural convection with a margin of 4 K below the 50 K design limit. The guaranteed efficiency of 98.0 % is roughly 1.3 points below the calculated 99.7 %, which absorbs material spread, winding tolerance and measurement uncertainty.

# 8 Line 6 — YTT-MED-4000-20K-FE (4000 VA, 20 kHz, ferrite)

Input 230 VAC, output 24 VAC, single secondary, Class F, natural convection, electrostatic shield and embedded thermal protector, as requested for this line.

Table 8 Requirements of line 6, YTT-MED-4000-20K-FE

| Parameter | Symbol | Requirement |
|---|---|---|
| Rated power | VA | 4000 VA |
| Rated frequency | f | 20000 Hz (20 kHz), fixed |
| Core material | — | Mn-Zn ferrite, 3C95 equivalent, epoxy coated |
| Turns ratio | Np : Ns | 33 : 3 |
| Primary turns | Np | 33 |
| Primary sections (dual primary option) | Np/2 each | 2 sections of 17 and 16 turns; 33 turns total in series for 230 VAC, 16 turns in parallel for 110 VAC |
| Secondary turns | Ns | 3 |
| Peak flux density | B | 0.136 T |
| Primary conductor | — | 83 × ø0.40 mm (AWG 26) bunched, 10.37 mm² total, per section |
| Secondary conductor | — | Flat-braided litz wire, 114.09 mm² copper, ≈908 × ø0.40 mm (AWG 26) individually enamelled strands |
| Current density | J | 1.68 A/mm² primary, 1.46 A/mm² secondary |
| Primary current | Ip | 17.39 A |
| Secondary current | Is | 166.7 A |
| Primary resistance, 20 °C | Rp | 0.008 Ω |
| Secondary resistance, 20 °C | Rs | 0.0001 Ω |
| Core loss, calculated | Pcore | 4.72 W |
| Copper loss, calculated | Pcu | 5.98 W |
| Total loss, calculated | Ptotal | 10.70 W |
| Calculated efficiency at rated load | η | 99.7 % |
| Guaranteed minimum efficiency | η min | 98.0 % at rated load, 25 °C ambient |
| Hot-spot rise, calculated | ΔT | 35.5 K at 10.70 W total loss |
| Design rise with 1.3 tolerance factor | 1.3 ΔT | 46 K |
| A — outside diameter | A | 98.0 mm ± 5 |
| B — inside diameter | B | 53.9 mm ± 3.5 |
| C — height | C | 41.2 mm ± 5 |
| Core mass | — | 1039 g |
| Total mass, estimated | — | 2088 g |
| Effective core area | Ae | 9.08 cm² |
| Magnetic path length | le | 238.6 mm |
| Window area | Aw | 22.8 cm² |
| Winding window utilisation | Ku | 0.30 (each winding occupies half the window) |
| Insulation class | — | Class F (155 °C) |
| Dielectric strength | — | 3,000 VAC 60 s primary to secondary; 2,000 VAC to core |
| Insulation resistance | — | ≥ 100 MΩ at 500 VDC |
| Electrostatic shield | — | Copper foil, separate lead, ≤ 250 pF |
| Thermal protector | — | 115 °C ± 5 K, embedded between winding layers |
| Mounting | — | Centre bolt M6 with nylon insulation washer; aluminium baseplate option |
| Termination | — | Primary leads 150 mm, AWG 18 silicone; secondary tabs on strip ends; lead length D = 120 mm standard (50–300 mm on request) |
| Cooling | — | Natural convection, vertical mounting |

The rise of this line is 35.5 K calculated and 46 K with the tolerance factor, so the rating is covered by natural convection with a margin of 4 K below the 50 K design limit. The guaranteed efficiency of 98.0 % is roughly 1.3 points below the calculated 99.7 %, which absorbs material spread, winding tolerance and measurement uncertainty.

# 9 Line 7 — YTT-MED-5000-20K-FE (5000 VA, 20 kHz, ferrite)

Input 230 VAC, output 24 VAC, single secondary, Class F, natural convection, electrostatic shield and embedded thermal protector, as requested for this line.

Table 9 Requirements of line 7, YTT-MED-5000-20K-FE

| Parameter | Symbol | Requirement |
|---|---|---|
| Rated power | VA | 5000 VA |
| Rated frequency | f | 20000 Hz (20 kHz), fixed |
| Core material | — | Mn-Zn ferrite, 3C95 equivalent, epoxy coated |
| Turns ratio | Np : Ns | 33 : 3 |
| Primary turns | Np | 33 |
| Primary sections (dual primary option) | Np/2 each | 2 sections of 17 and 16 turns; 33 turns total in series for 230 VAC, 16 turns in parallel for 110 VAC |
| Secondary turns | Ns | 3 |
| Peak flux density | B | 0.116 T |
| Primary conductor | — | 97 × ø0.40 mm (AWG 26) bunched, 12.13 mm² total, per section |
| Secondary conductor | — | Flat-braided litz wire, 133.47 mm² copper, ≈1062 × ø0.40 mm (AWG 26) individually enamelled strands |
| Current density | J | 1.79 A/mm² primary, 1.56 A/mm² secondary |
| Primary current | Ip | 21.74 A |
| Secondary current | Is | 208.3 A |
| Primary resistance, 20 °C | Rp | 0.007 Ω |
| Secondary resistance, 20 °C | Rs | 0.0001 Ω |
| Core loss, calculated | Pcore | 3.97 W |
| Copper loss, calculated | Pcu | 8.64 W |
| Total loss, calculated | Ptotal | 12.62 W |
| Calculated efficiency at rated load | η | 99.8 % |
| Guaranteed minimum efficiency | η min | 98.0 % at rated load, 25 °C ambient |
| Hot-spot rise, calculated | ΔT | 35.8 K at 12.62 W total loss |
| Design rise with 1.3 tolerance factor | 1.3 ΔT | 47 K |
| A — outside diameter | A | 106.0 mm ± 5 |
| B — inside diameter | B | 58.3 mm ± 3.5 |
| C — height | C | 44.5 mm ± 5 |
| Core mass | — | 1315 g |
| Total mass, estimated | — | 2642 g |
| Effective core area | Ae | 10.62 cm² |
| Magnetic path length | le | 258.1 mm |
| Window area | Aw | 26.7 cm² |
| Winding window utilisation | Ku | 0.30 (each winding occupies half the window) |
| Insulation class | — | Class F (155 °C) |
| Dielectric strength | — | 3,000 VAC 60 s primary to secondary; 2,000 VAC to core |
| Insulation resistance | — | ≥ 100 MΩ at 500 VDC |
| Electrostatic shield | — | Copper foil, separate lead, ≤ 250 pF |
| Thermal protector | — | 115 °C ± 5 K, embedded between winding layers |
| Mounting | — | Centre bolt M6 with nylon insulation washer; aluminium baseplate option |
| Termination | — | Primary leads 150 mm, AWG 18 silicone; secondary tabs on strip ends; lead length D = 120 mm standard (50–300 mm on request) |
| Cooling | — | Natural convection, vertical mounting |

The rise of this line is 35.8 K calculated and 47 K with the tolerance factor, so the rating is covered by natural convection with a margin of 3 K below the 50 K design limit. The guaranteed efficiency of 98.0 % is roughly 1.3 points below the calculated 99.8 %, which absorbs material spread, winding tolerance and measurement uncertainty.

# 10 Core material recommendation, 2000 VA to 5000 VA

The order schedule leaves the choice of ferrite or nanocrystalline open for lines 5 to 7. Both variants were designed with the same rules and the same target of 38 K calculated rise, so the comparison below is like for like.

Table 10 Ferrite against nanocrystalline at 20 kHz, identical design rules

| Rating | Core material | Pcore / Pcu / Ptotal (W) | A — OD (mm) | Core mass (g) | Jp (A/mm²) | Design rise (K) | Calculated η (%) |
|---|---|---|---|---|---|---|---|
| 3000 VA | Ferrite | 2.9 / 6.22 / 9.08 | 100.0 | 1116 | 1.94 | 46 | 99.7 |
| | Nanocrystalline | 6.8 / 4.77 / 11.60 | 100.0 | 1277 | 1.57 | 48 | 99.6 |
| 4000 VA | Ferrite | 4.7 / 5.98 / 10.70 | 102.0 | 1020 | 1.68 | 46 | 99.7 |
| | Nanocrystalline | 6.2 / 7.70 / 13.92 | 110.0 | 1700 | 1.73 | 48 | 99.7 |
| 5000 VA | Ferrite | 4.0 / 8.64 / 12.62 | 107.0 | 1470 | 1.79 | 47 | 99.8 |
| | Nanocrystalline | 9.8 / 6.61 / 16.45 | 118.0 | 2098 | 1.45 | 49 | 99.7 |

Note: This comparison is designed on **equal total loss & equal temperature rise target**. Nanocrystalline core is selected with larger outer diameter and larger window area to reduce copper loss. If designed for equal flux density (B), nanocrystalline can achieve a much smaller dimensional envelope than ferrite.

Our recommendation for lines 5 to 7 is ferrite as the standard, with nanocrystalline offered as the alternative. At 20 kHz the ferrite design reaches a lower total loss and a smaller and lighter core, because the flux density can be pushed to 0.12 to 0.16 T where the ferrite loss is still low, while the tape-wound ring needs more turns and more core volume for the same rise. The nanocrystalline variant keeps its advantage in copper loss: at 5000 VA it runs at 1.45 A/mm² against 1.79 A/mm² for ferrite, so it tolerates a poorer air path, a higher ambient or a short overload better.

Where the customer qualification requires a metallic core, the nanocrystalline variant should be selected even at a slightly higher loss: it has no brittle ceramic body, a far higher Curie temperature, a lower thermal expansion mismatch and better behaviour under inrush and saturation. Where efficiency and mass dominate, ferrite is the better answer at 20 kHz in this rating range. Both variants are quoted separately and neither replaces the other.

★★★

Important design note for nanocrystalline alternative (3000 VA / 4000 VA / 5000 VA @20 kHz):
Within this specification's comparison table, primary and secondary turn-counts as well as conductor cross-sections are kept identical between ferrite and nanocrystalline variants.
- The voltage transformation ratio remains unchanged, so nominal output voltage is maintained.
- The nanocrystalline core uses larger outer-dimensional geometry (higher Ae), which reduces peak flux density Bpk, avoiding saturation risk.

- This design targets equal total loss and hot-spot temperature-rise for comparison purpose; it does NOT exploit nanocrystalline's capability for size-reduction.
- For a size-optimised nanocrystalline solution, primary / secondary turns shall be recalculated to take advantage of higher saturation flux density of nanocrystalline material. Such re-optimised design will have different dimensional envelope and shall be quoted separately.

# 11 Material specification

The cores are specified by grade and by the geometry that the winding data depends on. Equivalent grades from a second source may be used only after a loss check at the rated flux density and frequency, because the loss coefficient differs by up to 15 % between suppliers.

| Configuration | Material | Grade / build | Ae (cm²) | le (mm) |
|---|---|---|---|---|
| YTT-MED-500-25K-FE | Mn-Zn ferrite | 3C95 class, μi 3000, epoxy coated | 2.40 | 127.0 |
| YTT-MED-1000-25K-FE | Mn-Zn ferrite | 3C95 class, μi 3000, epoxy coated | 3.30 | 154.0 |
| YTT-MED-1500-25K-FE | Mn-Zn ferrite | 3C95 class, μi 3000, epoxy coated | 4.28 | 165.0 |
| YTT-MED-2000-20K-FE | Mn-Zn ferrite | 3C95 class, μi 3000, epoxy coated | 5.40 | 195.6 |
| YTT-MED-3000-20K-FE | Mn-Zn ferrite | 3C95 class, μi 3000, epoxy coated | 9.64 | 219.0 |
| YTT-MED-4000-20K-FE | Mn-Zn ferrite | 3C95 class, μi 3000, epoxy coated | 8.07 | 255.1 |
| YTT-MED-5000-20K-FE | Mn-Zn ferrite | 3C95 class, μi 3000, epoxy coated | 11.13 | 260.0 |

Table 11 Core specification per configuration

Table 12 Winding wire specification per configuration

| Configuration | Primary conductor | Secondary conductor |
|---|---|---|
| YTT-MED-500-25K-FE | 9 × ø0.35 mm (AWG 27) bunched, 0.90 mm² total, per section | Flat-braided litz wire, 9.12 mm² copper, ≈95 × ø0.35 mm (AWG 27) individually enamelled strands |
| YTT-MED-1000-25K-FE | 22 × ø0.35 mm (AWG 27) bunched, 2.07 mm² total, per section | Flat-braided litz wire, 21.38 mm² copper, ≈222 × ø0.35 mm (AWG 27) individually enamelled strands |
| YTT-MED-1500-25K-FE | 33 × ø0.35 mm (AWG 27) bunched, 3.17 mm² total, per section | Flat-braided litz wire, 32.96 mm² copper, ≈262 × ø0.40 mm (AWG 26) individually enamelled strands |
| YTT-MED-2000-20K-FE | 40 × ø0.40 mm (AWG 26) bunched, 5.04 mm² total, per section | Flat-braided litz wire, 54.20 mm² copper, ≈431 × ø0.40 mm (AWG 26) individually enamelled strands |
| YTT-MED-3000-20K-FE | 53 × ø0.40 mm (AWG 26) bunched, 6.71 mm² total, per section | Flat-braided litz wire, 72.17 mm² copper, ≈574 × ø0.40 mm (AWG 26) individually enamelled strands |
| YTT-MED-4000-20K-FE | 83 × ø0.40 mm (AWG 26) bunched, 10.37 mm² total, per section | Flat-braided litz wire, 114.09 mm² copper, ≈908 × ø0.40 mm (AWG 26) individually enamelled strands |
| YTT-MED-5000-20K-FE | 97 × ø0.40 mm (AWG 26) bunched, 12.13 mm² total, per section | Flat-braided litz wire, 133.47 mm² copper, ≈1062 × ø0.40 mm (AWG 26) individually enamelled strands |

Primary wire is Class F enamelled copper (NEMA MW 35-C, 200 °C rated, single build), bunched where the table states a bunched construction. Each primary section is wound with the

conductor of the table and the two sections are wound side by side in the same window, fully insulated from each other, so that they can be connected in series or in parallel by the customer. The secondary winding is flat-braided litz wire: every individual strand carries its own Class F enamel, the braid is flat and can be wound directly on the uncut ring by a standard toroidal winding machine, and there is no intermediate turn-to-turn welding joint, only the two end terminations. The flat cross-section keeps the window fill factor close to that of a strip winding while the strand insulation suppresses skin and proximity effect at 20 to 25 kHz. All windings are vacuum impregnated with a Class F polyester or epoxy resin, cured to a hard, non-hygroscopic body, and the core is epoxy coated before winding.

# 12 Mounting, termination and shielding

Table 13 Mounting, termination and lead length per configuration

| Configuration | Centre bolt | Baseplate code | Primary termination | Secondary termination | Lead length D |
|---|---|---|---|---|---|
| YTT-MED-500-25K-FE | M5 × 25 mm | AL-500 | 4 leads P1–P4, 150 mm, AWG 18 silicone, 2 per section + 1 shield lead | Tinned braided-litz ends, 150 mm, 2 leads | 120 mm standard |
| YTT-MED-1000-25K-FE | M5 × 25 mm | AL-1000 | 4 leads P1–P4, 150 mm, AWG 18 silicone, 2 per section + 1 shield lead | Tinned braided-litz ends, 150 mm, 2 leads | 120 mm standard |
| YTT-MED-1500-25K-FE | M5 × 25 mm | AL-1500 | 4 leads P1–P4, 150 mm, AWG 18 silicone, 2 per section + 1 shield lead | Tinned braided-litz ends, 150 mm, 2 leads | 120 mm standard |
| YTT-MED-2000-20K-FE | M5 × 25 mm | AL-2000 | 4 leads P1–P4, 150 mm, AWG 18 silicone, 2 per section + 1 shield lead | Tinned braided-litz ends, 150 mm, 2 leads | 120 mm standard |
| YTT-MED-3000-20K-FE | M6 × 30 mm | AL-3000 | 4 leads P1–P4, 150 mm, AWG 18 silicone, 2 per section + 1 shield lead | Tinned braided-litz ends, 150 mm, 2 leads | 120 mm standard |
| YTT-MED-4000-20K-FE | M6 × 30 mm | AL-4000 | 4 leads P1–P4, 150 mm, AWG 18 silicone, 2 per section + 1 shield lead | Tinned braided-litz ends, 150 mm, 2 leads | 120 mm standard |
| YTT-MED-5000-20K-FE | M6 × 30 mm | AL-5000 | 4 leads P1–P4, 150 mm, AWG 18 silicone, 2 per section + 1 shield lead | Tinned braided-litz ends, 150 mm, 2 leads | 120 mm standard |

The centre bolt passes through the ring and is insulated from the core by a nylon washer and a Class F sleeve, so the bolt carries no potential. The aluminium baseplate option mounts the ring on a 3 mm plate with a thermal interface pad; it adds 6 mm to C and 12 mm to A on each side, and it lowers the thermal resistance by about 15 %, which is useful where the enclosure restricts air flow. The electrostatic shield is a copper foil between the two windings, brought out on its own lead; it is not connected to either winding at the factory, and the customer bonds it to the circuit reference.

# 13 Alternative configurations

The alternatives below are quoted separately and do not replace the main schedule. They share the same core, the same insulation system and the same tests as the main lines; only the winding data and, for the medical variant, the insulation distances change.

Table 14 Secondary turns for the 12 VAC and 48 VAC output alternatives

| Configuration | Np | Ns at 24 V | Ns at 12 V | Ns at 48 V |
|---|---|---|---|---|
| YTT-MED-500-25K-FE | 91 | 9 | 5 | 19 |
| YTT-MED-1000-25K-FE | 62 | 6 | 3 | 13 |
| YTT-MED-1500-25K-FE | 52 | 5 | 3 | 11 |
| YTT-MED-2000-20K-FE | 43 | 4 | 2 | 9 |
| YTT-MED-3000-20K-FE | 43 | 4 | 2 | 9 |
| YTT-MED-4000-20K-FE | 33 | 3 | 2 | 7 |
| YTT-MED-5000-20K-FE | 33 | 3 | 2 | 7 |

For 110/230 VAC dual primary the primary is split into two identical 115 V sections of Np/2 turns each, wound side by side in the same window and insulated from each other. The two sections are connected in series for 230 VAC and in parallel for 110 VAC, and four leads P1 to P4 are brought out on the terminal side so that the customer makes the selection externally; no internal changeover link is fitted, because an internal link is a single point of failure on the primary side and would not be acceptable in the medical variant. Table 15 gives the connection matrix. The volts per turn is identical in both modes, so the flux density, the core loss, the copper loss and the temperature rise of the 230 VAC design remain valid for 110 VAC operation without recalculation.

Wiring rule: series for 230 VAC - link P2 to P3 and feed P1 and P4. Parallel for 110 VAC - link P1 to P3 and P2 to P4, then feed the paralleled pair. The leads are phase marked, and a wrong parallel connection (one section reversed) cancels the flux and destroys the transformer; the marking and the wiring diagram are therefore fixed in the drawing package. Changeover is permitted only with the unit de-energised and discharged.

**Table 15 Dual-primary 110/230 VAC connection matrix**

| Connection | Supply | Lead connection | Equivalent Np (500 VA example) | Volts per turn | Remarks |
|---|---|---|---|---|---|
| Series | 230 VAC, 50/60 Hz | P2 linked to P3; supply across P1 and P4 | 91 turns | 2.53 V/turn | Standard build, as quoted |
| Parallel | 110 VAC, 50/60 Hz | P1 linked to P3 and P2 linked to P4; supply across the paralleled pair | 46 turns | 2.39 V/turn | Optional build; flux density and losses unchanged within 1 % |

# 14 Quality, testing and documentation

Table 16 Quality and documentation programme

| Item | Content |
|---|---|
| Routine test, 100 % | Turns ratio within ±1 %, no-load current, no-load loss, polarity, 1 min dielectric strength 3,000 VAC, insulation resistance 100 MΩ at 500 VDC, thermal protector continuity, shield isolation |
| Type test, per design | Temperature rise at rated load in 40 °C chamber until stable, loss measurement by power analyser, induced overvoltage, damp heat 21 days, vibration sweep 10–55–10 Hz |
| Documentation with shipment | Certificate of conformance per batch, routine test record per unit serial, temperature-rise type test report, material declarations (RoHS, REACH), supplier issued UL certificates for the insulating raw materials, dimensional report for the first article |
| UL status | The finished transformer has no UL 5085-1 / UL 5085-2 Recognized Component approval, and YETCOIL holds no UL 1446 insulation system file. Magnet wire, insulation film, sleeving and impregnating resin are purchased with supplier issued UL certificates, which are forwarded on request; a set of raw material certificates does not constitute a UL 1446 system evaluation. Acceptability of this component in the end product is decided by the customer end-product certification. |
| Traceability | Core batch, wire batch, resin batch and thermal protector lot recorded against each serial number, retained for ten years |

Every unit is routine tested before packing; no unit is shipped on a sample basis only. The type test report of the temperature-rise run is specific to the configuration and the core supplier, and is re-run when either changes.

Appendix A Dimension reference letters

The letters used in every clause follow the drawing below: A is the outside diameter, B the inside diameter, C the height and D the lead length. The same letters are used in the datasheet and in the calculation book, so a dimension can be traced across the three documents without ambiguity.

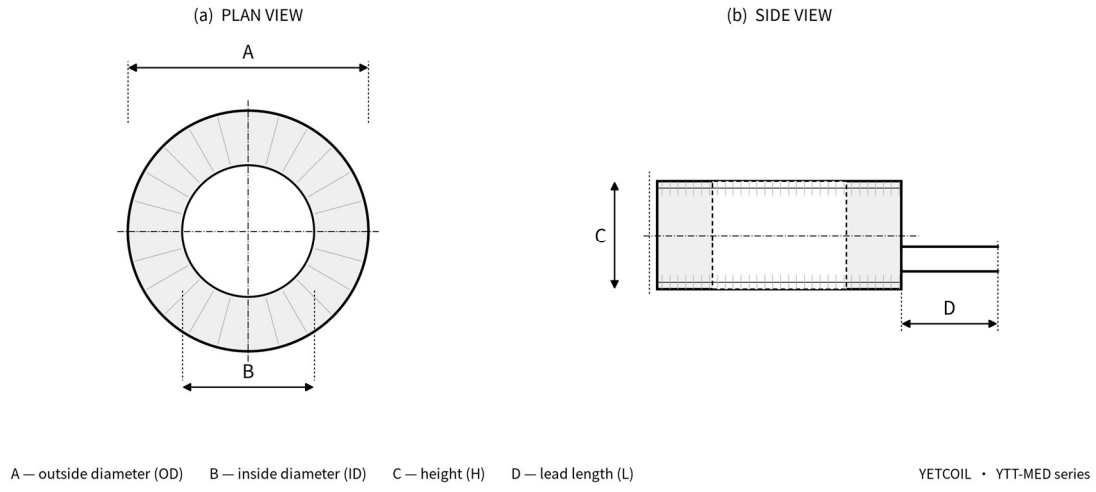


Figure 2 Dimension reference letters A to D

Table 17 Definition of the dimension letters

| Letter | Dimension | Value for this order |
|---|---|---|
| A | Outside diameter OD | 28.0 mm to 118.0 mm across the seven lines, ± 5mm |
| B | Inside diameter ID | 15.4 mm to 64.9 mm, ± 3.5 mm |
| C | Height H | 12 mm to 50 mm, ± 5 mm; add 6 mm with the baseplate option |
| D | Lead length L | 120 mm standard, 50 mm to 300 mm on request |

